REVISIONS					
REV	ECN#	DESCRIPTION	REV.BY	APPR.BY	DATE
A	- -	Initial release	W.FS	M.D	2020/4/16

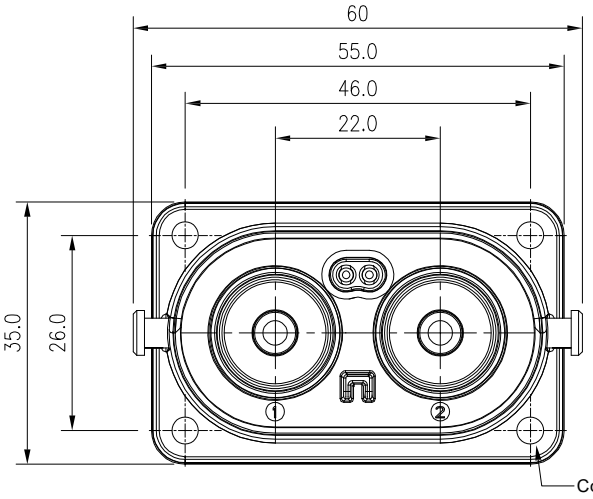

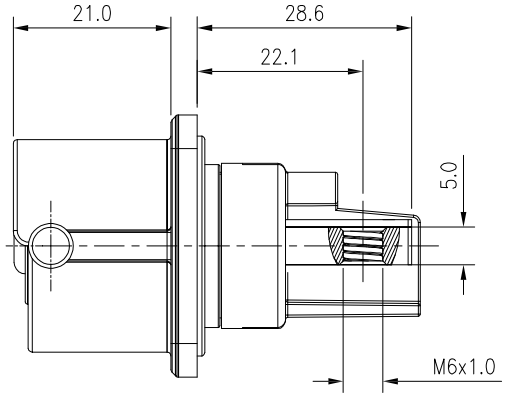

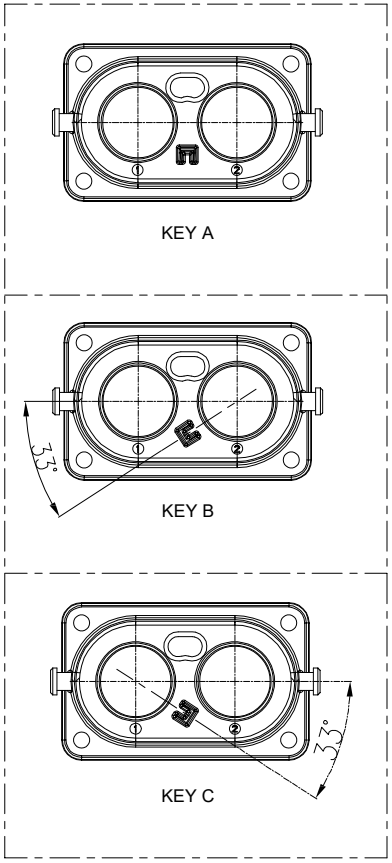

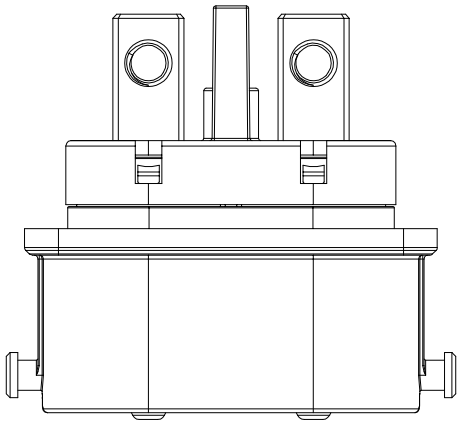

Ordering Information

BMC082 X-12 X- 10 M6

A=Key A B=Key B C=Key C	0=No HVIL 1=HVIL	M6=M6x1.0 Internal thread

Technical Specifications:
1.Operating Temperature:-40°C-+125°C
2.Insulation Resistance:＞200MΩ at DC 1000V
3.Dielectric Withstanding Voltage: AC 3000V
4.Current Rating:120A(Max)
5.Protection Class: IP67
6.ROHS

THE COPYRIGHT BELONGS TO BALE

BALE		Sichuan Bale Electrical Equipment Co. Ltd			
		WEIGHT	MATERIAL: /		PART NAME: BMC120 Two-Core Rcpt
SIGNATURE		DATE	SHEET	No tolerance(mm):	CUST P/N: /
DRAWN	W.FS		1/2	x.: ±1.0 x..: ±0.5 x...: ±0.2	
CHECKED	M.D		PROJECTION	Angle: ±2°	DWG NO: BMC082X-12X-10M6
APPROVAL	M.D				

REVISIONS					
REV	ECN#	DESCRIPTION	REV.BY	APPR.BY	DATE
A	- -	Initial release	W.FS	M.D	2020/4/16

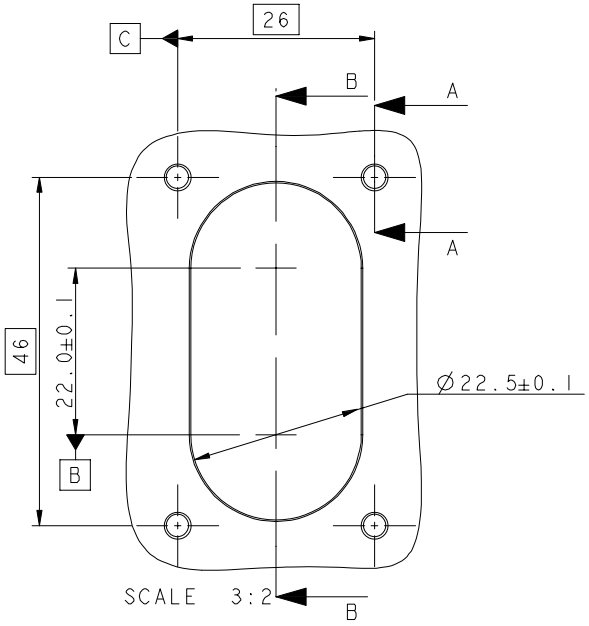

PANEL SIZE

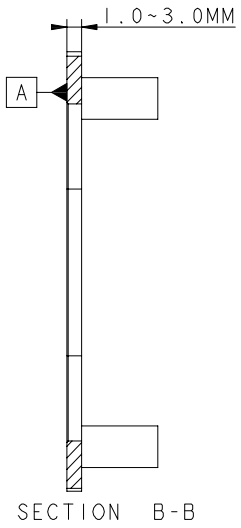

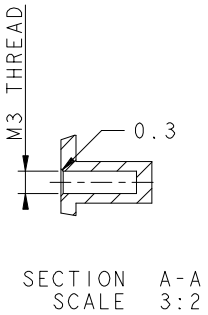

THE COPYRIGHT BELONGS TO BALE

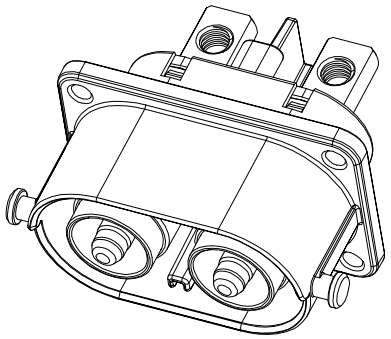

BALE		Sichuan Bale Electrical Equipment Co. Ltd			
		WEIGHT	MATERIAL: /		PART NAME: BMC120 Two-Core Rcpt
SIGNATURE		DATE	SHEET	No tolerance(mm):	CUST P/N: /
DRAWN	W.FS		2/2	x.: ±1.0 x..: ±0.5 x...: ±0.2	
CHECKED	M.D		PROJECTION	Angle: ±2°	DWG NO: BMC082X-12X-10M6
APPROVAL	M.D				